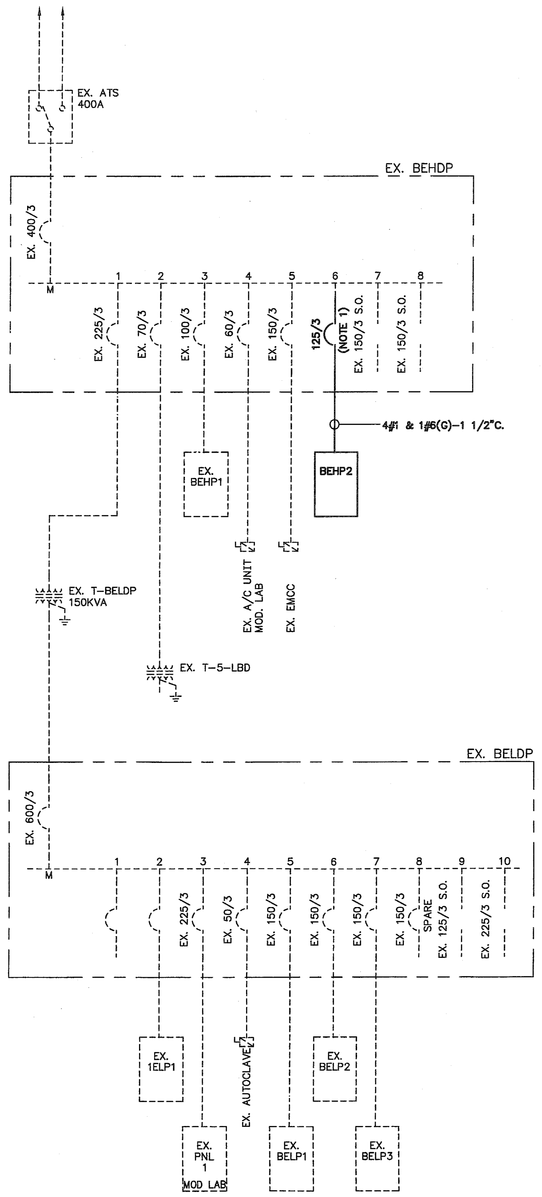

SINGLE-LINE DIAGRAM
POWER DISTRIBUTION
NO SCALE

NOTES:

1. PROVIDE NEW BREAKER IN EXISTING PANEL. MATCH THE EXISTING (MANUFACTURER, AIC, ETC.).

LUMINAIRE SCHEDULE

MARK	LAMPS QTY	LAMPS TYPE	VOLTS	DESCRIPTION	SPECIAL OPTIONS & NOTES	MANUFACTURER	CATALOG NUMBER
FGA3	3	F32T8/RE841	120	RECESSED STATIC FLUORESCENT 2'x4' LAY-IN LUMINAIRE. ACRYLIC LENS, FLUSH STEEL WHITE FRAME. FULLY GASKETED BETWEEN DOOR FRAME AND LENS, HOUSING AND DOOR FRAME, AND HOUSING AND CEILING.	U.L. LISTED FOR WET LOCATIONS.	DAYBRITE LITHONIA COLUMBIA METALUX	2-DPWL-G-3-32-FS-12-3W
FVM2	2	F32T8/RE841	120	FLUORESCENT WET LOCATION FIXTURE, SURFACE MOUNTED. NON-CORROSIVE HOUSING, FULLY GASKETTED.	U.L. LISTED FOR WET LOCATIONS.	DAYBRITE LITHONIA COLUMBIA METALUX	D-W-A-2-32-UNV-EB
FWM2	2	F32T8/RE841	120	SURFACE MOUNTED "CLEANROOM" FLUORESCENT 1'x4' FIXTURE. ACRYLIC LENS WITH FULLY GASKETED BETWEEN DOOR FRAME AND LENS, HOUSING AND DOOR FRAME. PROVIDE WITH ALUMINUM HOUSING AND DOORFRAME.	U.L. LISTED FOR WET LOCATIONS. CAULK FIXTURE TO CEILING AS PER THE MANUFACTURER DIRECTIONS.	LITHONIA DAYBRITE COLUMBIA METALUX	SSH-2-32-FWF-K12V-GEB-GLR
FWM4	4	F32T8/RE841	120	SURFACE MOUNTED "CLEANROOM" FLUORESCENT 2'x4' FIXTURE. ACRYLIC LENS WITH FULLY GASKETED BETWEEN DOOR FRAME AND LENS, HOUSING AND DOOR FRAME. PROVIDE WITH ALUMINUM HOUSING AND DOORFRAME.	U.L. LISTED FOR WET LOCATIONS. CAULK FIXTURE TO CEILING AS PER THE MANUFACTURER DIRECTIONS.	LITHONIA DAYBRITE COLUMBIA METALUX	2SSH-4-32-FWF-K12V-GEB-GLR
FWM4A	4	F32T8/RE841	120	SURFACE MOUNTED "CLEANROOM" FLUORESCENT 2'x4' FIXTURE. ACRYLIC LENS WITH FULLY GASKETED BETWEEN DOOR FRAME AND LENS, HOUSING AND DOOR FRAME. PROVIDE WITH ALUMINUM HOUSING AND DOORFRAME.	U.L. LISTED FOR WET LOCATIONS. PROVIDE WITH (2) BALLAST FOR MULTI-LEVEL. CAULK FIXTURE TO CEILING AS PER THE MANUFACTURER DIRECTIONS.	LITHONIA DAYBRITE COLUMBIA METALUX	2SSH-4-32-FWF-K12V-GEB-GLR
XA		WITH UNIT	120/27	SELF-POWERED, SINGLE FACE CEILING MOUNTED EXIT SIGN. BRUSHED ALUMINUM HOUSING. RED LETTERS, CHEVERONS AS INDICATED ON DRAWINGS.	U.L. FOR DAMP LOCATIONS.	MCPHILBEN EMERGILITE LITHONIA SURELIGHTS	ER55L-1-12/27-R-DR
XW		WITH UNIT	120/277	SELF-POWERED, SINGLE FACE WALL MOUNTED EXIT SIGN. BRUSHED ALUMINUM HOUSING. RED LETTERS, CHEVERONS AS INDICATED ON DRAWINGS.	U.L. FOR DAMP LOCATIONS.	MCPHILBEN EMERGILITE LITHONIA SURELIGHTS	ER55L-1-12/27-R-DR
XJ		WITH UNIT	120/277	SURFACE MOUNTED SELF-POWERED EMERGENCY LUMINAIRE. TWO-HEAD, 12 WATT PAR LAMPS, THERMOPLASTIC HOUSING. 6VOLT NICAD BATTERY.	U.L. FOR DAMP LOCATIONS.	MCPHILBEN DUAL-LITE LITHONIA	CTX6N12WCSWD-DR

LUMINAIRE SCHEDULE NOTES

1. MANUFACTURER CATALOG NUMBERS ARE SHOWN FOR GENERAL DESCRIPTIVE PURPOSES AND TO ESTABLISH STANDARD OF QUALITY ONLY. CONTRACTOR SHALL PROVIDE LUMINAIRES COMPLETE WITH ALL OPTIONS AND ACCESSORIES REQUIRED FOR A COMPLETE INSTALLATION. ALL PRODUCTS SHALL BE UL LISTED.
2. PROVIDE PROPER LAMP FOR REFLECTOR ASSEMBLY SPECIFIED AND AS RECOMMENDED BY LUMINAIRE MANUFACTURER.
3. LINEAR FLUORESCENT LAMPS/ELECTRONIC BALLAST:

   FURNISH ALL LINEAR FLUORESCENT LAMPED LUMINAIRES WITH ENERGY EFFICIENT LAMPS AND ELECTRONIC BALLAST.

   a. FURNISH SOLID STATE HIGH FREQUENCY RAPID OR INSTANT START BALLAST FOR LINEAR FLUORESCENT LUMINAIRES. BALLAST SHALL HAVE FIVE (5) YEAR MANUFACTURER'S WARRANTY.

   b. BALLAST SHALL BE HIGH FREQUENCY (20KHz OR GREATER), OPERATE WITHOUT DETECTABLE FLICKER, AND SHALL PROVIDE FULL LIGHT OUTPUT. BALLAST SHALL BE U.L. CLASS P RATED FOR THERMAL PROTECTION AND RATED AT 50 DEGREES F STARTING TEMPERATURE. BALLAST SHALL NOT CONTAIN PCB TYPE MATERIAL.

   c. BALLAST SHALL COMPLY WITH FCC AND NEMA LIMITS GOVERNING EMI AND RFI AND SHALL NOT INTERFERE WITH OPERATION OF OTHER NORMAL ELECTRICAL EQUIPMENT. TOTAL HARMONIC DISTORTION SHALL BE LESS THAN 20% BALLAST SHALL BE SOUND RATED A AND SHALL HAVE A CREST FACTOR OF 1.7 OR LESS.

   SYSTEM OF LAMPS AND BALLAST (IN ENCLOSED FLUORESCENT FIXTURE) SHALL PRODUCE THE FOLLOWING WHEN USED TOGETHER.

   T8 LAMPS WITH ELECTRONIC BALLAST:

CONFIGURATION	BALLAST FACTOR	BALLAST EFFICACY FACTOR
2-LAMP	.88	1.46
3-LAMP	.88	1.00
4-LAMP	.85	0.75

   ACCEPTABLE BALLAST MANUFACTURER: ADVANCE, OSRAM/SYLVANIA, HOWARD INDUSTIRES, UNIVERSAL, VALMONT.

4. COMPACT FLUORESCENT LAMPS/ELECTRONIC BALLAST:

   COMPACT FLUORESCENT LUMINAIRES WITH RAPID START LAMPS (> 13 WATT) SHALL BE FURNISHED WITH PROGRAMMED RAPID START ELECTRONIC BALLAST.

   BALLAST SHALL BE UNIVERSAL VOLTAGE (120 OR 277V) AND OPERATE 26, 32 OR 42 WATT COMPACT FLUORESCENT LAMPS, IN ONE OR TWO LAMP CONFIGURATIONS, WITHOUT CHANGING BALLAST WIRING.

   BALLAST SHALL BE HIGH FREQUENCY, RAPID START, AND OPERATE LAMP WITHOUT DETECTABLE FLICKER. BALLAST SHALL BE HIGH POWER FACTOR (PF > 0.95), THD < 10%, AND BALLAST FACTOR > 0.95 BALLAST SHALL INCORPORATE AN END-OF-LIFE PROTECTIVE LAMP CIRCUIT.

   ACCEPTABLE BALLAST MANUFACTURER: ADVANCE, OSRAM/SYLVANIA ROBERTSON, UNIVERSAL

5. PROVIDE FUSES FOR UNGROUNDED CONDUCTORS SUPPLYING FLUORESCENT AND H.I.D. BALLASTS. FLUORESCENT: GMF/HLR H.I.D.: HEB/KTK. PROVIDE FUSE SIZED FOR RATING OF BALLAST.
6. ACCEPTABLE LAMP MANUFACTURERS:
   FLUORESCENT & INCANDESCENT: GE, OSRAM/SYLVANIA, PHILIPS
   HID AND QUARTZ-HALOGEN LAMPS: G.E., OSRAM/SYLVANIA, PHILIPS, VENTURE, USHIO
7. PROVIDE FLUORESCENT LAMPS WITH LOW-MERCURY CONTENT, COMPLIANT WITH FEDERAL EPA TCLP REQUIREMENTS, a.K.a "ECO", "ALTO", OR "ECOLUX"
8. VERIFY CONSTRUCTION OF CEILINGS BEING INSTALLED AND PROVIDE THE LUMINAIRES SPECIFIED IN APPROPRIATE CONFIGURATION WITH ALL HARDWARE AND ACCESSORIES REQUIRED FOR COMPATIBLE INSTALLATION.
9. PROVIDE LUMINAIRES WITH JOINING PLATES, END CAPS, CANOPIES, MOUNTING HARDWARE, ETC., AS REQUIRED FOR COMPLETE INSTALLATION.
10. PROVIDE DEVICES FOR SECURING LAY-IN TYPE LUMINAIRES TO CEILING GRID TO COMPLY WITH ARTICLE 410 OF THE NATIONAL ELECTRICAL CODE.
11. FURNISH LINEAR LUMINAIRES IN CONTINUOUS ROWS OR PATTERNS AS INDICATED ON DRAWINGS. PROVIDE WITH CORNER, ANGLE, AND END PIECES AS REQUIRED FOR A COMPLETE FINISHED INSTALLATION.
12. SEE DETAIL #1, THIS SHEET FOR ADDITIONAL SUPPORT FOR ALL 2'x4' LUMINAIRE FIXTURES.

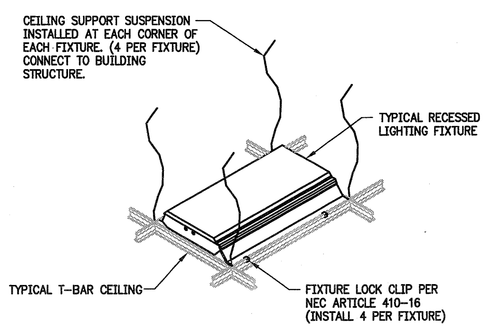

1 / E0.02 DETAIL
RECESSED 2'x4' MOUNTING
NO SCALE

PANELBOARD SCHEDULE

MARK	TYPE	AIC	MAINS TYPE	MAINS AMPS	SERVICE	BRANCHES 1 POLE	2 POLE	3 POLE	SPARES	SPACES	MTD.	LUG LOC.	REMARKS
BEHP2	BEF	65K	MLO	150	277/480V 3PH., 4W			(8) 15/3 (1) 20/3		(9) 50/1	S	T	

PANELBOARD SCHEDULE NOTES

1. ALL PANELBOARDS TO BE FURNISHED WITH 25% GROUND BUS AND CONTINUOUS HINGED TRIM DOOR.
2. ALL FLUSH MOUNTED PANELBOARDS SHALL HAVE (3) - 1" EMPTY CONDUITS STUBBED ABOVE ACCESSIBLE CEILING.
3. SEE SPECIFICATIONS FOR ADDITIONAL REQUIREMENTS.
4. PROVIDE ARC FLASH WARNING LABELS FOR ALL PANELS AS PER N.E.C. 110.16.

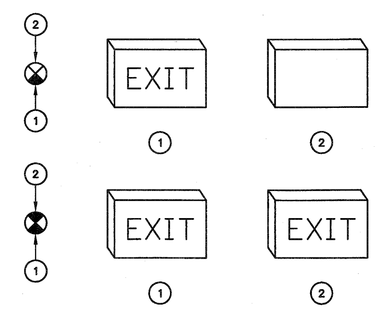

2 / E0.02 DETAIL
EXIT SIGNS
NO SCALE

C·R·S
Engineering and Design Consultants
3504 7th Avenue South
Birmingham AL 35222
P.205.252.3273 F.205.252.3751
web: www.crsegr.com

Job No. 08350
Dwg File: 08350E01.DWG
Plot Date:1/28/09-05:50

ALABAMA REGISTERED PROFESSIONAL ENGINEER No. 23137 ISRAEL ROWIN
1/28/09

Karlsberger
2509 Seventh Avenue South
Birmingham, AL 35233-3319
t 205.252.9191 | f 205.251.9618
karlsberger.com
Karlsberger Architecture Inc.

© Copyright 2008

BSL-3 LABORATORY RENOVATION
STATE LABORATORY FOR THE ALABAMA PUBLIC HEALTHCARE AUTHORITY
MONTGOMERY, ALABAMA

KARLSBERGER PROJECT NO.
60-0007AA-000

ISSUE DATE

SHEET INFORMATION

CURRENT DATE
01/28/09

REVISIONS

SHEET TITLE
LUMINAIRE, PANELBOARD SCHEDULES, NOTES AND SINGLE-LINE

SCALE

SHEET NO.
E0
02